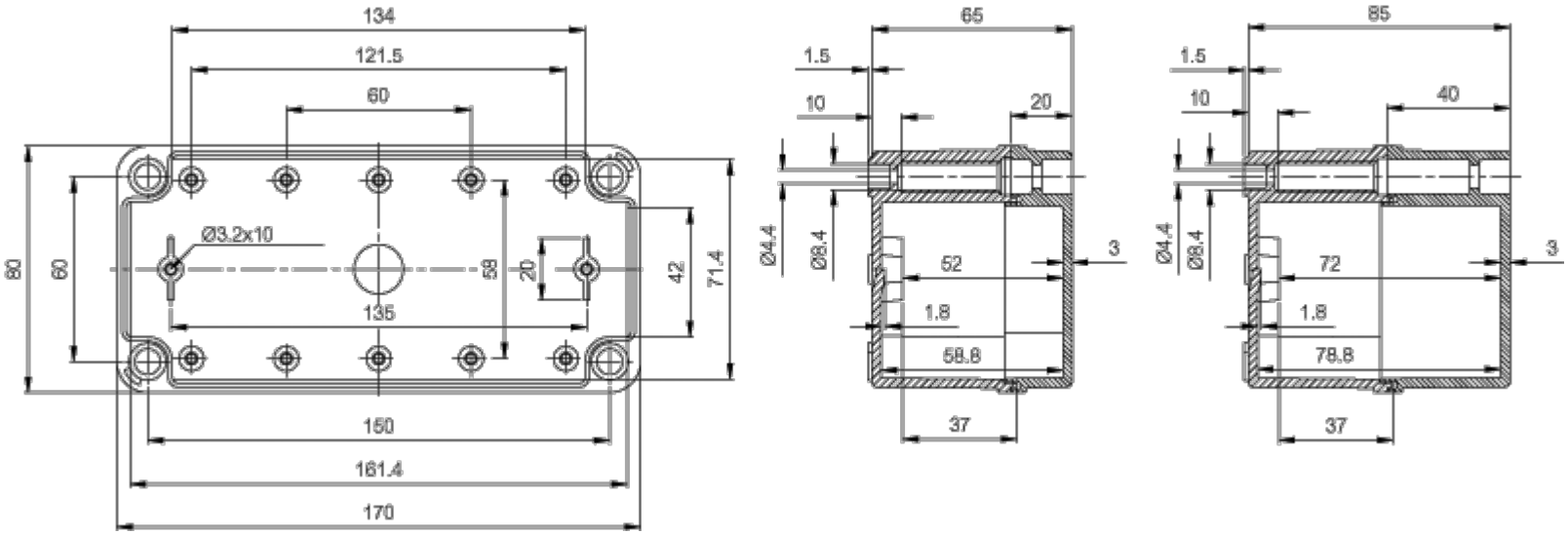
134
121.5
60
80
60
Ø3.2x10
58
20
42
71.4
135
150
161.4
170
65
1.5
10
20
Ø4.4
Ø8.4
52
3
1.8
58.8
37
85
1.5
10
40
Ø4.4
Ø8.4
72
3
1.8
78.8
37